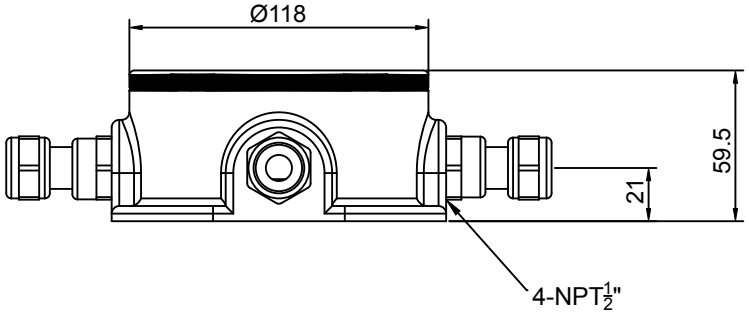


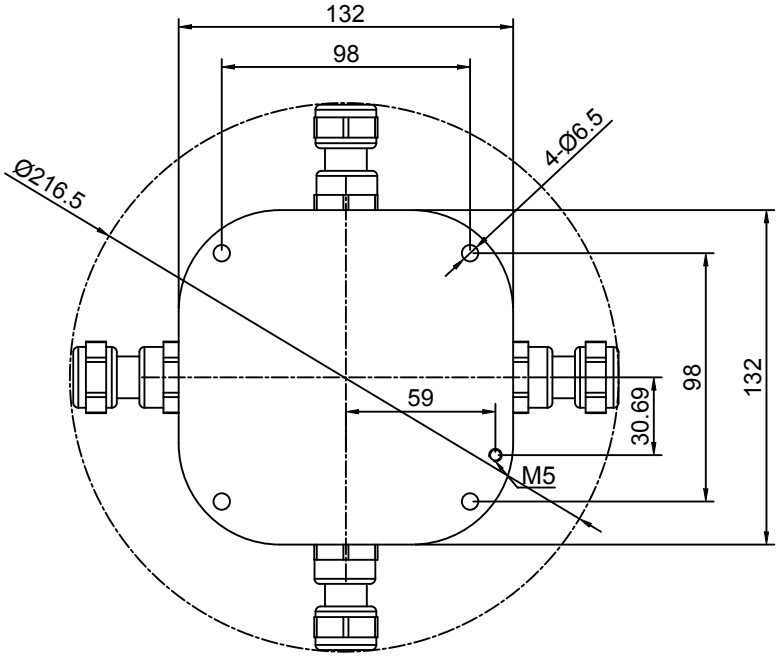


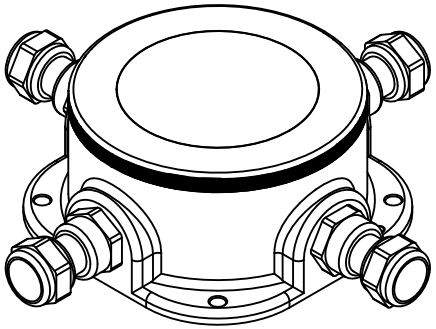

| SURFACE TREATMENT | MATERIAL | Q'TY | DESIGNED |
|---|---|---|---|
| - | | 1 | |
| SCALE | PROJECTION | UNIT | |
| | | mm | 251125 |

SEATRONX
Our Vision is Your Vision

| | |
|---|---|
| PART NAME | Outside drawing |
| PART CODE | |
| TITLE NAME | H10** |
| Doc. CODE | - |
| SHEET NO | 1 of 1 |

A2